Concept map for the project P1

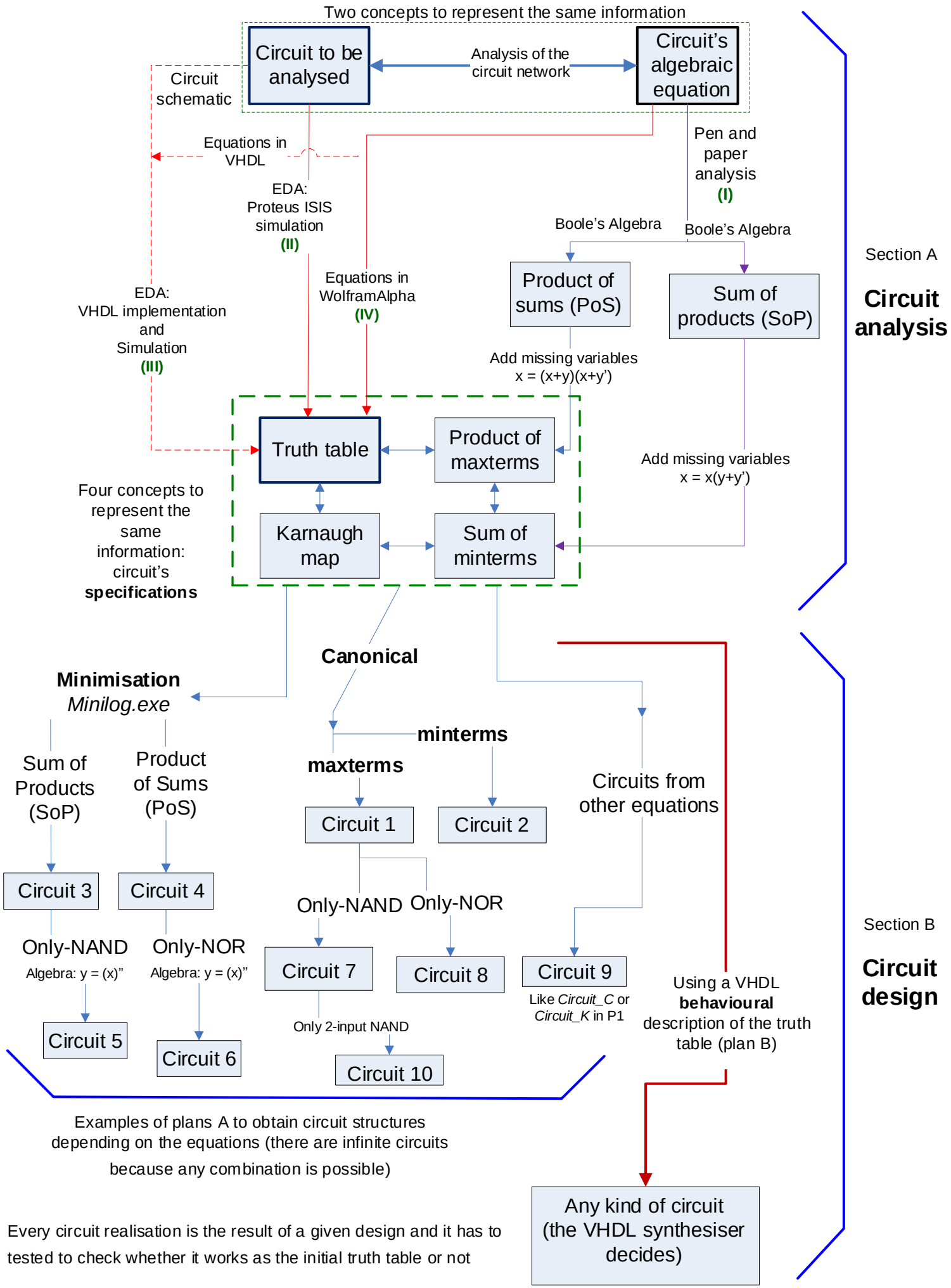

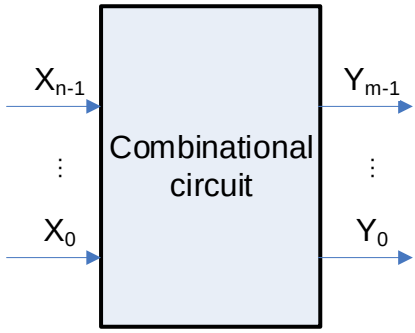
X_{n-1}
X_0
Combinational circuit
Y_{m-1}
Y_0

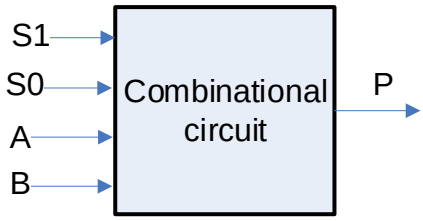
S1
S0
A
B
Combinational circuit
P